Spare Parts List (Kits)

Model Ref.:- HM35

SERIES A

Spare Parts List (Kits) Issue 1 Dated 03-November-2008

Reference Drawing 09-1108-0000 Issue A Dated 22-October-2008

Drawing Ref.	Part Number	DESCRIPTION	Qty Per
		TRUVOX SERVICE SHEET PAGE 1	
		SOLUTION TANK ASSEMBLY	
1	X9042TEAL+	Housing, Solution Tank, Blue	1
2	71651A	Screw, #10-32 x 1/ 2 Phil Pan MS 18 – 8 SS	1
3	7BF008	Nut, Kep	1
4	X9144+	Chain, 28” Zinc Plated	1
5	X9081+	Solution Tank Lid	1
6	X8235+	Washer, 1/ 4 Flat USS Zinc	2
7	X8209S+	Screw, 1/ 4 – 20 x 1/ 2 Hex Cap	10
8	X9086+	Bracket, Tank Mount, 90°	2
9	X9085+	Tank Mount Bracket	2
10	X9125-1+	Label, Tank Capacity, (Not Shown)	1
11	X8400TV+	Truvox Label 'Hydromist 35'	1
12	X9012+	Main Chassis Weldment	1
13	X9066+	Wheel, 12” x1 3/ 4”, Non-marking Gray Tire on Black Wheel	2
14	X8020+	Washer, Countersunk Axle	2
15	X8210+	Screw, 1 /4 – 20 x 1/2 Flat Phil MS Zinc	2
16	X9019+	Grommet, 5 -7 /8” Long (Extruded)	1
17	X9057+	Label, Operator Instruction (Not Shown)	1
18	X9111+	Cord Clamp	1
19	X9134+	Brush Warning Label	1
20	72091A	Screw, 10-24 x 3 /8, Phil Pan, MS, 18-8 SS	1
21	X8241+	Nut, 10-24 Hex, SS	1
22	X9206+	Truvox Label	2
		Parts Not Shown on Drawing	
	X9151+	End Cap Supports	2
	PX61A+	Ear Clamp	1
	PX5+	Quick Disconnect Male 1/4"FTP x 1/4"MALE	1
		SOLUTION FITTING ASSEMBLY	
23	PX48+	Fitting, Brass Bulkhead 3/ 4”	1
23B	PX48G+	Nut, Brass Bulkhead 3/ 4” - Part of PX48+	1
24	72274A	Washer, 3/ 4 “ Neoprene – Bond, Galvanized	1
25	X9294+	Pump Protection Filter, SLS ½” FNPT 30x30 SST	1
26	PX85+	Barb, Beaded, 1/ 2H – 1/ 4M	1
27	PX3H+	Hose, 1/ 2” Wire Reinforced	1
28	7DL003	Clamp, 1/ 2” Worm Gear SS, Hex Slot, Phil	2

Truvox International Ltd.,
Third Avenue, Millbrook,
Southampton. Hampshire.
SO15 0LE.
Service & Spares: 023 80706601
Customer Services: 023 80706600
General Enquiries: 023 80702200

TRUVOX INTERNATIONAL

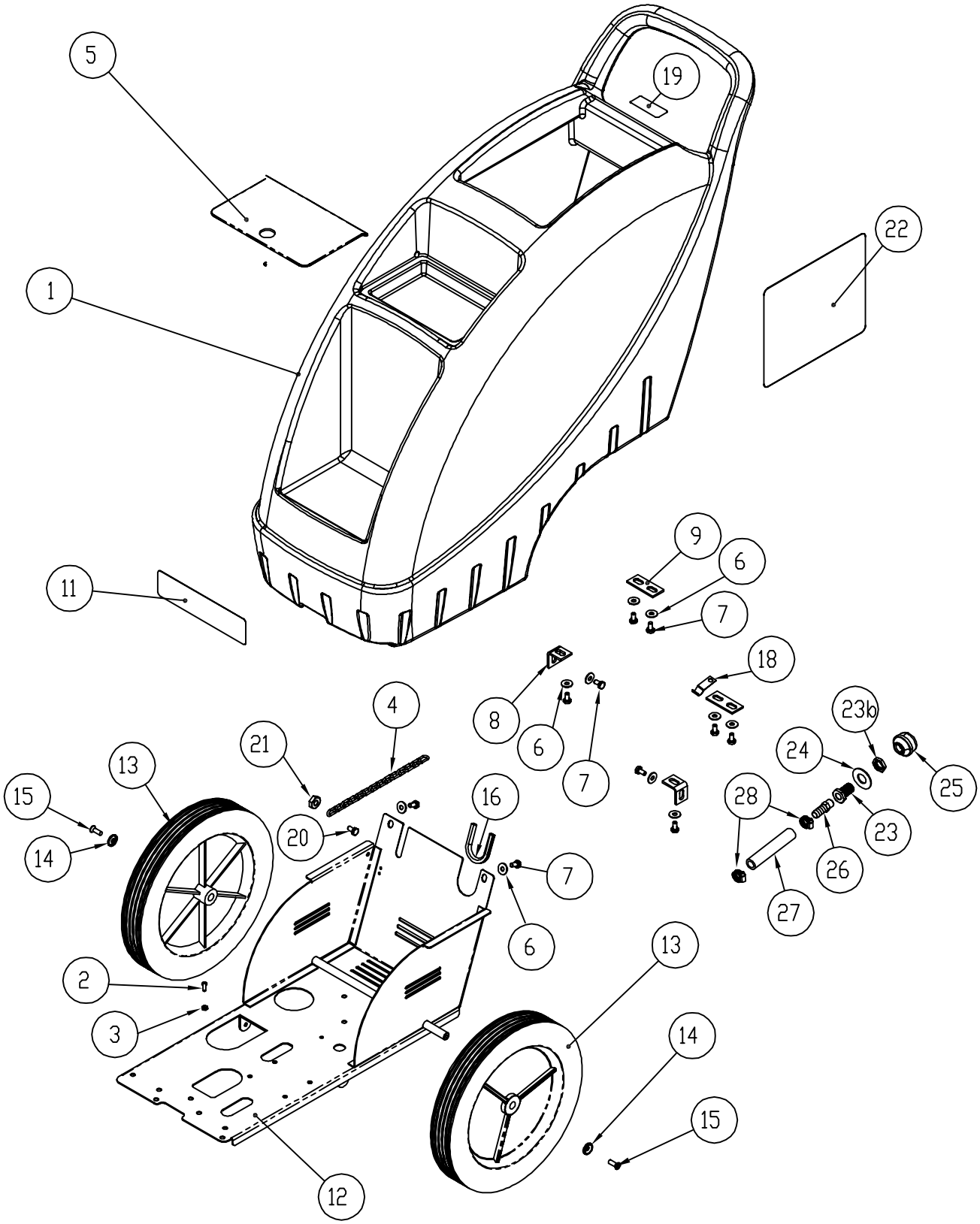

						SCALE NTS	TITLE HM35 GENERIC SERVICE DRAWINGS		
						CHECKED M.D.C.	PRODUCT HM35	DRAWING/PART No 09-1108-0000	A4	SHEET 1 OF 6 SHEETS
22.10.08		A	NEW DRAWING	MC	MC	DRN M.D.C.			
DATE	CRO No	ISS	REVISION RECORD	DR	CHK				

Drawing Ref.	Part Number	DESCRIPTION	Qty Per
		TRUVOX SERVICE SHEET PAGE 2	
		RECOVERY TANK ASSEMBLY	
1	X9041REPRO+	Recovery Tank Housing, Black	1
2	X9129+	Vac Stack Assembly	1
3	PX14+	Gasket 1-1 /2” Thin, 2.50 x 1.75 Rubber	1
4	X9075+	Bushing 1- 1 /2” x 1- 1/ 4” PVC, Sch 40, Threaded	1
5	72173A	Spring Clip	1
6	X9053+	Float Cage w/ 1- 1/ 2” NPT neck & Heavy Ball	1
7	7DL005	Clamp, 1 -1/ 2 Worm Gear, SS, Hex Slot HD	1
8	X9120-1+	Vacuum Motor Gasket	1
9	72611A-C	3 Stage Vac Motor	1
10	PX25+	Fitting, Plastic 1 -1/ 2” NPT x 1- 1/ 2” Hose Barb	2
11	X9092+	Vac Hose, 1.5” x 21” w/ Cuffs	1
12	PX11A+	Fitting, Plastic Elbow, 90°, 1- 1/ 2” FTP x Slip	1
13	X8222+	Screw, 1/ 4 – 20 x 3/ 16 Soc Set Cup PT	2
14	X8858+	Washer, .299 ID, .622 OD, .055 THK, Zinc Plated	9
17	X8288+	Screw, 1/ 4 – 20 x 4.50 Hex Zinc, All Threaded	3
18	PAS37+	Drain Hose	1
19	PAS36+	Drain Hose Plug	1
20	X8262+	Screw, #8-32 x 1/ 4 THPH, Blk	2
21	X9071+	Gasket Small Dome, Medium Density	1
22	X9033+	Small Dome	1
23	X9084+	Cover Gasket	1
24	X9080+	Recovery Tank Float Cover	1
25	PX46+	Nut, Lock, Die Cast, 1- 1/ 2’	1
26	X8261+	Screw, #6 x 1/ 2” Phil Flat HD	1
28	X9120-2+	Gasket, Large Dome Spacer	4
29	X9057+	Label Operator Instruction	1
		Parts Not Shown on Drawing	
	PX63+	Coupler Plastic 1-1/2" Slip x 1-1/2" FTP	1
		RECOVERY DOME ASSEMBLY	
30	X9034+	Recovery Tank Dome	1
31	9124+	Recovery Dome Gasket	1
32	X9110+	Knob, Large Dome Lid	1
33	X9098+	#10 x 1”, A Point, PH Pan Head	1
34	X9068+	Chain, 12” SS Jack	1
35	7CM003	Washer, #10 USS Flat, 18-8 SS	1
36	X8849+	Screw, #8-18 x 1 /2” Phil Pan Hi-Lo, Black Zinc	1

Truvox International Ltd.,
Third Avenue, Millbrook,
Southampton. Hampshire.
SO15 0LE.
Service & Spares: 023 80706601
Customer Services: 023 80706600
General Enquiries: 023 80702200

TRUVOX INTERNATIONAL

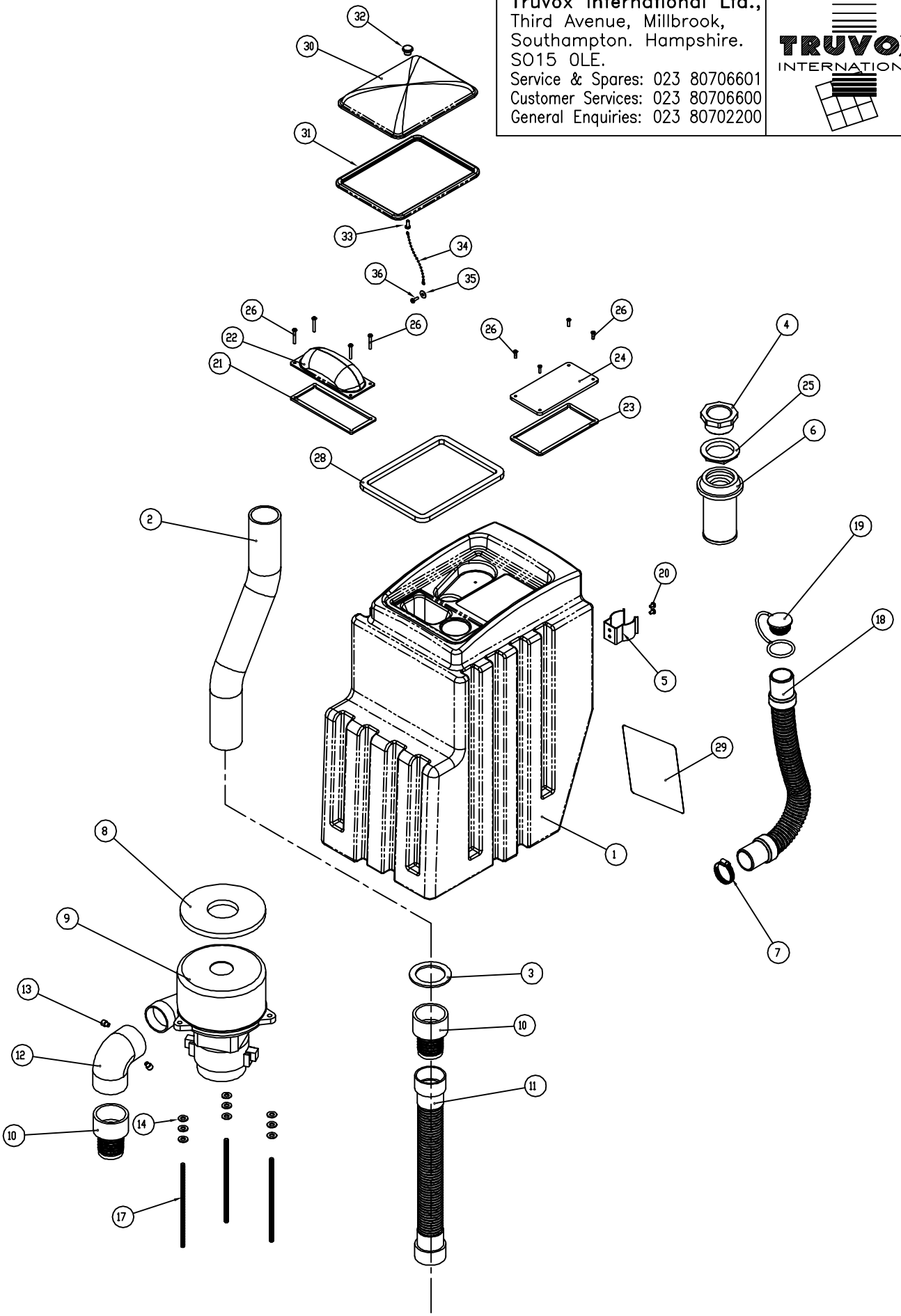

						SCALE NTS	TITLE HM35 GENERIC SERVICE DRAWINGS		
						CHECKED M.D.C.	PRODUCT HM35	DRAWING/PART No 09–1108–0000	A4	SHEET 2 OF 6 SHEETS
22.10.08		A	NEW DRAWING	MC	MC	DRN M.D.C.			
DATE	CRO No	ISS	REVISION RECORD	DR	CHK				

Drawing Ref.	Part Number	DESCRIPTION	Qty Per
		TRUVOX SERVICE SHEET PAGE 3	
		BRUSH HOUSING ASSEMBLY	
1	X9015+	Brush Housing Weldment	1
2	7BF008	Nut, Kep #10-32 Zinc	3
3	X9004+	Brush Drive Belt	1
4	X8034+	Bridge Rectifier, FWB	1
5	X8055+	Strain Relief, Model, Crimp	1
6	X9107+	Brush Lift Bracket	1
8	X9174+	Plug, 3/4” Black Nylon	2
9	X9030+	Foot Pedal Pin	2
10	X9026+	Brush Lift Pedal	1
11	X9122+	Safty Walk Tape, 1” Wide, Black	1
12	72241A	Washer, 1 / 4 x 7/16 Nylon	6
13	X9114+	E Ring, 1 /4”	4
16	7CY001	Washer, #10 INT Tooth Lock	2
17	71651A	Screw, #10-32 x 1/ 2 Phil Pan MS, 18-8 SS	2
18	7CU003	Screw, 1 /4-20 x 1 Phil Pan MS, 18-8 SS	2
19	X8237+	Nut, 1 /4 -20 Nylon Insert Lock	2
20	7BR005	Screw, #10-32 x 3 /4 Phil Pan MS, 18-8 SS	1
21	X8830+	Nut, #10-32 Nylon Insert Lock SS	1
22	7BH004	Screw, #10-32 x 3 /8 Phil Pan MS, 18-8 SS	3
23	M1327+	Cord, 50’	1
24	7CM003	Washer, #10 USS, Flat, 18-8 SS	1
		Parts Not Shown on Drawing	
	X9100+	Grommet 1/2"	2
	X9282+	Brush Motor EMI Filter	1
	X9027+	Brush Lift Pedal Spacer	2
	X9259+	Surge Suppressor	1
		BRUSH MOTOR ASSEMBLY	
25	X9169+	Nut, #10-32 Hex Flange, SS	2
26	X9119+	Motor, 220 VDC – For 230V Models	1
27	X9099+	Spacer, SCE Motor	2
28	X9116+	Drive Pulley, 12 tooth w/ two 8-32 Set Screws	1
29	X9118+	Screw, #10-32 x 5/8 Flat HD SS	8
30	X9015A+	Motor Cover	1
31	X9126+	Gasket, Brush Motor Cover	1
32	X9015B+	Belt Cover	1
33	X9150+	Gasket, Belt Cover	1
34	X8241+	Nut, 10-24 Hex, SS	2
35	7CU001	Screw, 10-24 x 1”, Phil Pan MS, 18-8 SS	1
		MANIFOLD ASSEMBLY	
36	X9021+	Spray Manifold	1
38	X9139+	Miniature Nozzle Tip, 1/8 NPT #2 95”	2
39	7AK003	Elbow, Union, 1/8 NPT	1
40	PC66+	Fitting, Brass, 1/8 NPTM x 1/ 4 Hose Barb	1
41	X8542+	Hose, Solution, 1/ 4 ID, 400PSI	1
42	7DL003	Clamp, 1/ 4 Worm, Gear, SS, Hex Slot, Phil	1
43	7CM007	Washer, 1/ 2” USS Flat 18-8 SS	2
45	PC45+	Nipple Close 1/8"	1
		Parts Not Shown on Drawing	
	X8293+	Nylon Washer .50"ID x .75"OD x .130"THK	2
		BRUSH ASSEMBLY	
46	X9017+	Brush Axle, 3/8” Dia x 17.952’ Long	1
47	X9070+	Brush, 3’ Dia x 18” Chevron	1

Drawing Ref.	Part Number	DESCRIPTION	Qty Per
48	X9001+	Brush Bearing, 3/8 ID x 7/8OD x .2812 #9R-6	2
49	X9117+	Brush Driven Pulley, 24 Teeth, 20xL037	1
50	X9018+	Brush Bearing Spacer, Nylon	2
51	X9019+	Brush Bearing Shield	1
52	X9020+	Brush Thread Guard	1
53	X9118+	Screw, #10-32 x 5/8” FHMS SS	2
54	X9115+	Washer, Spring 3/8” ID SS	1

Truvox International Ltd.,
Third Avenue, Millbrook,
Southampton. Hampshire.
SO15 0LE.
Service & Spares: 023 80706601
Customer Services: 023 80706600
General Enquiries: 023 80702200

TRUVOX INTERNATIONAL

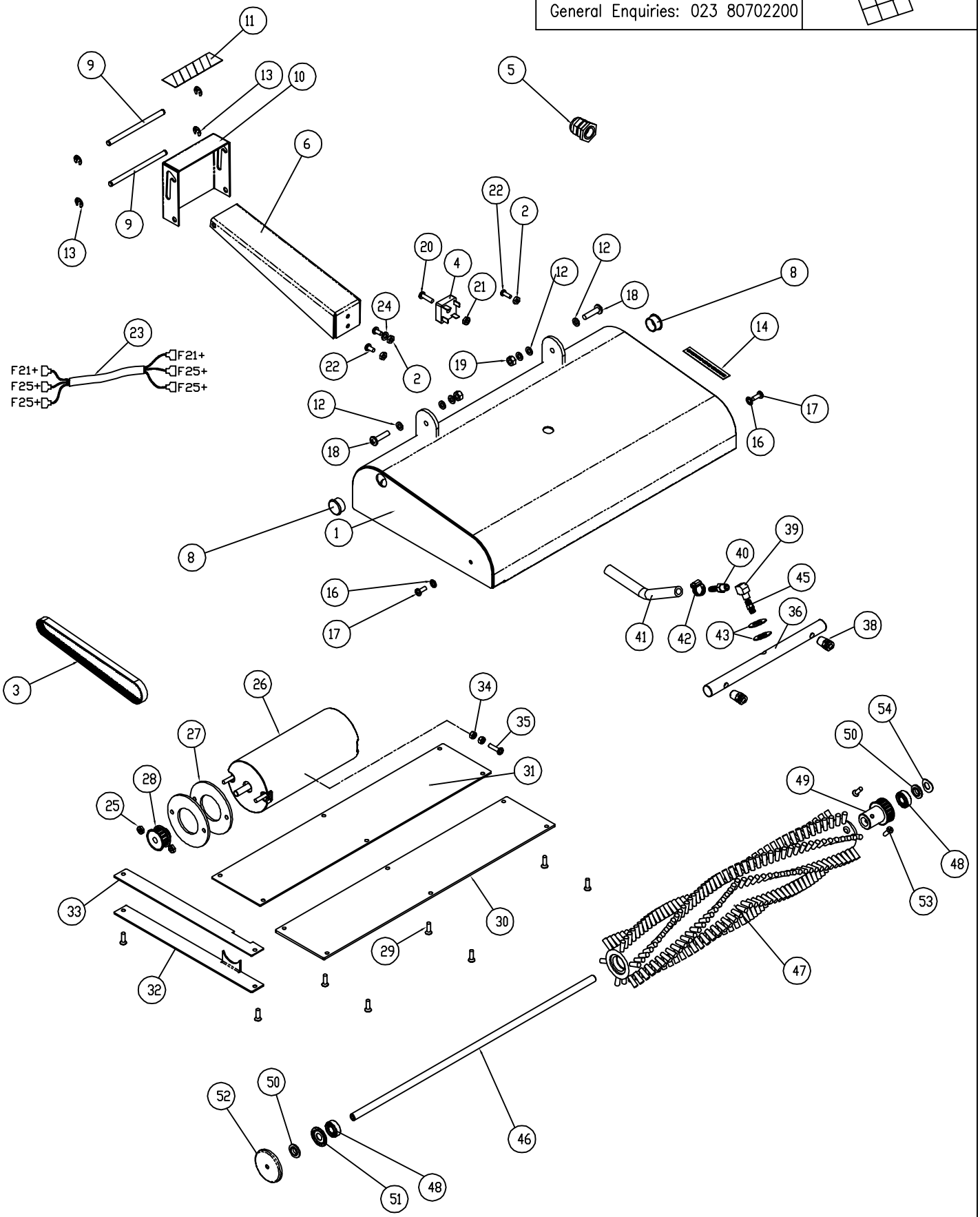

						SCALE NTS	TITLE HM35 GENERIC SERVICE DRAWINGS		
						CHECKED M.D.C.	PRODUCT HM35	DRAWING/PART No 09-1108-0000	A4	SHEET 3 OF 6 SHEETS
22.10.08		A	NEW DRAWING	MC	MC	DRN M.D.C.			
DATE	CRO No	ISS	REVISION RECORD	DR	CHK				

Drawing Ref.	Part Number	DESCRIPTION	Qty Per
		TRUVOX SERVICE SHEET PAGE 4	
		100 PSI PUMP ASSEMBLY 230V	
1	FJ2002+	100 PSI Shurflo pump, 220V volt	1
2a	X8542+	Solution Hose 1/4" ID 400PSI 14" Long	1
2b	X8542+	Solution Hose 1/4" ID 400PSI 16" Long	1
2c	X8542+	Solution Hose 1/4" ID 400PSI 10.5" Long	1
3	PX212+	90° Elbow Fitting 1/4" NPTM x 1/4" Hose Barb Brass	1
4	7AT006	Barbed Elbow Connector 1/4"F - 1/8" Hose	2
5	7CX001	Nipple Hex 1/8"	1
6	SW132-5+	Soleniod 220v 400PSI	1
7	SW139+	Elbow 1/8"	1
8	SW107+	Solenoid Bracket	1
9	7AV002	Union T 1/8" NPT	1
10	PC66+	Barbed Connector 1/8" NPTM x 1/4H	1
11	PX3H+	Hose, 1/ 2” Wire Reinforced	1
12	72186A	Elbow Barbed 3/8"H x 1/4M	1
13	7BH004	Screw 10-32 x 3/8" Phil Pan	3
14	7BF008	Nut 10-32 Nylon Insert Lock	1
		Parts Not Shown on Drawing	
	X9519+	EMC Filter Pump	

Truvox International Ltd.,
Third Avenue, Millbrook,
Southampton. Hampshire.
SO15 0LE.
Service & Spares: 023 80706601
Customer Services: 023 80706600
General Enquiries: 023 80702200

TRUVOX INTERNATIONAL

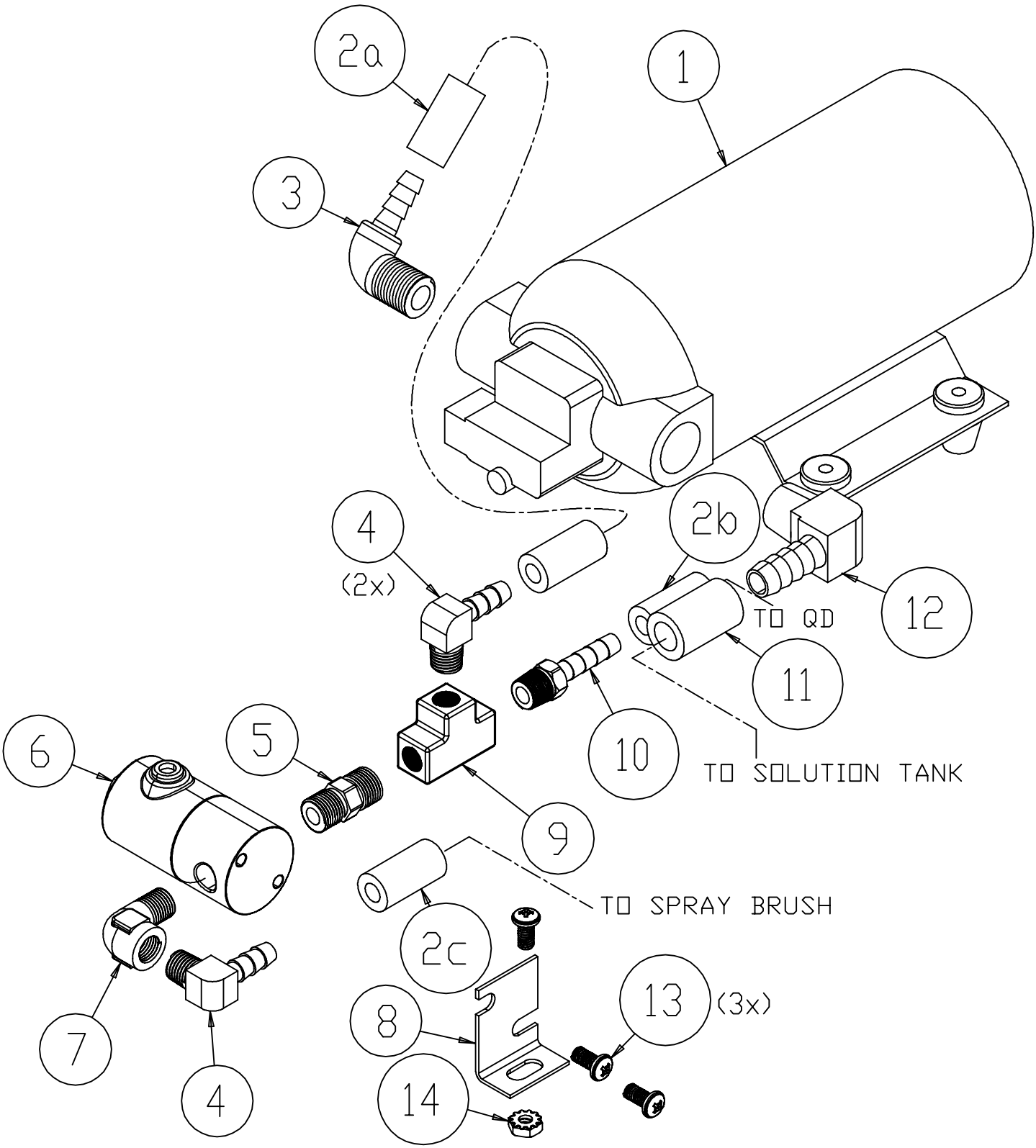

						SCALE NTS	TITLE HM35 GENERIC SERVICE DRAWINGS		
						CHECKED M.D.C.			
22.10.08		A	NEW DRAWING	MC	MC	DRN M.D.C.	PRODUCT HM35	DRAWING/PART No 09-1108-0000	A4	SHEET 4 OF 6 SHEETS
DATE	CRO No	ISS	REVISION RECORD	DR	CHK				

Drawing Ref.	Part Number	DESCRIPTION	Qty Per
		TRUVOX SERVICE SHEET PAGE 5	
		VAC SHOE ASSEMBLY	
1	X9009+	Vacuum Shoe, Aluminum	1
2	X9013+	Vac Shoe Tube	1
3	X9014+	Hinge	2
4	X8222+	Screw, 1/ 4 -20 x 3/16 Soc Set Cup Point	1
5	X8239+	Washer, 1/ 2” USS Flat18 -8 SS	2
6	PX6+	1/ 4 x 1/ 4 Female Quick Disconnect Brass Fitting	1
7	7AT003	Hosebarb Fitting, 1/ 4 H – 1/ 4 M	1
8	7DL003	Clamp, 1 /4” Worm Gear, SS, Hex Slot Phil	1
9	X9096+	Flip Door Hinge w/ Spring Assembly	1
10	X9097+	Gasket, Flip Door 3/32” EPDM	1
11	7BH004	Screw, #10-32 x 3/8 Phil Pan MS, 18-8 SS	2
12	7CL002	Washer, 1/ 4 Split Lock SS	6
13	X8282+	Bolt, 1 /4 -20 x 1 Hex SS	6
14	X8209+	Screw, 1 /4 -20 x 1/ 2” Hex Cap	4
15	7CY002	Washer, 1/ 4 INT tooth Lock, SS	4
16	7CN001	Nut, 1/ 4 -20 Hex SS	6

Truvox International Ltd.,
Third Avenue, Millbrook,
Southampton. Hampshire.
SO15 0LE.
Service & Spares: 023 80706601
Customer Services: 023 80706600
General Enquiries: 023 80702200

TRUVOX INTERNATIONAL

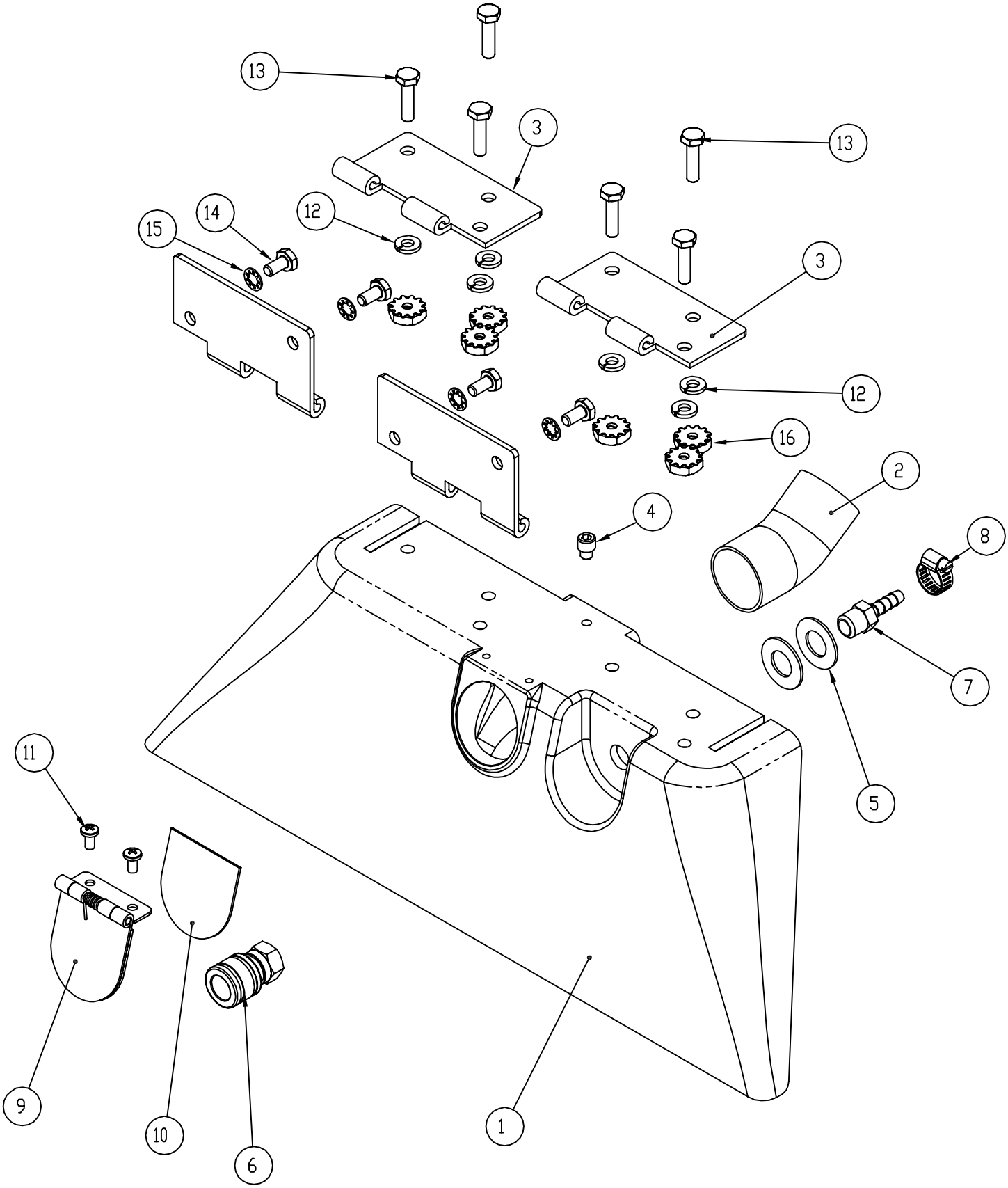

						SCALE NTS	TITLE HM35 GENERIC SERVICE DRAWINGS		
						CHECKED M.D.C.	PRODUCT HM35	DRAWING/PART No 09-1108-0000	A4	SHEET 5 OF 6 SHEETS
22.10.08		A	NEW DRAWING	MC	MC	DRN M.D.C.			
DATE	CRO No	ISS	REVISION RECORD	DR	CHK				

Drawing Ref.	Part Number	DESCRIPTION	Qty Per
		TRUVOX SERVICE SHEET PAGE 6	
		CONTROL PANEL ASSEMBLY	
1	X9043TEAL+	Housing, Cover, Blue	1
2	X9200+	Rocker Switch With Paddle Sp	1
3	X9506+	Rocker Switch, Curvette	3
4	72086A	Circuit Breaker, 2.5 Amps	1
5	X8008P+	Strain Relief, Plastic	1
6	04-3055-0053	Power Cord UK	1
	04-3055-0153	Power Cord Euro	1
7	X9093+	Label, 3-Hole Switch Panel	1
8	PD8+	Strain Relief, 1/ 2” NPT	1
9	M1409+	Cable, 14/8, 600V, 90C Jacket	5'
10	X8008N+	Nut, Lock, 1/ 2” Steel Conduit	2
12	7BR005	Screw, #10-32x 3 /4 Phil Pan MS, 18-8 SS	2
13	X9135+	Screw, #10 -32 x 1 3/32 Hex Socket	2
14	7DN004	Nut Cap 10-32 SS	2
15	7CM003	Washer, #10 USS Flat, 18-8 SS	4
		Parts Not Shown on Drawing	
	X9281+	EMI Mains Filter	1
	X9380+	Capacitor EMI mains Filter	1
	F27+	Spade Terminal - Power Cord	1
	F35+	Wire Connector Female - Power Cord	1
	F36+	Wire Connector Male - Power Cord	1

Truvox International Ltd.,
Third Avenue, Millbrook,
Southampton. Hampshire.
SO15 0LE.
Service & Spares: 023 80706601
Customer Services: 023 80706600
General Enquiries: 023 80702200

TRUVOX INTERNATIONAL

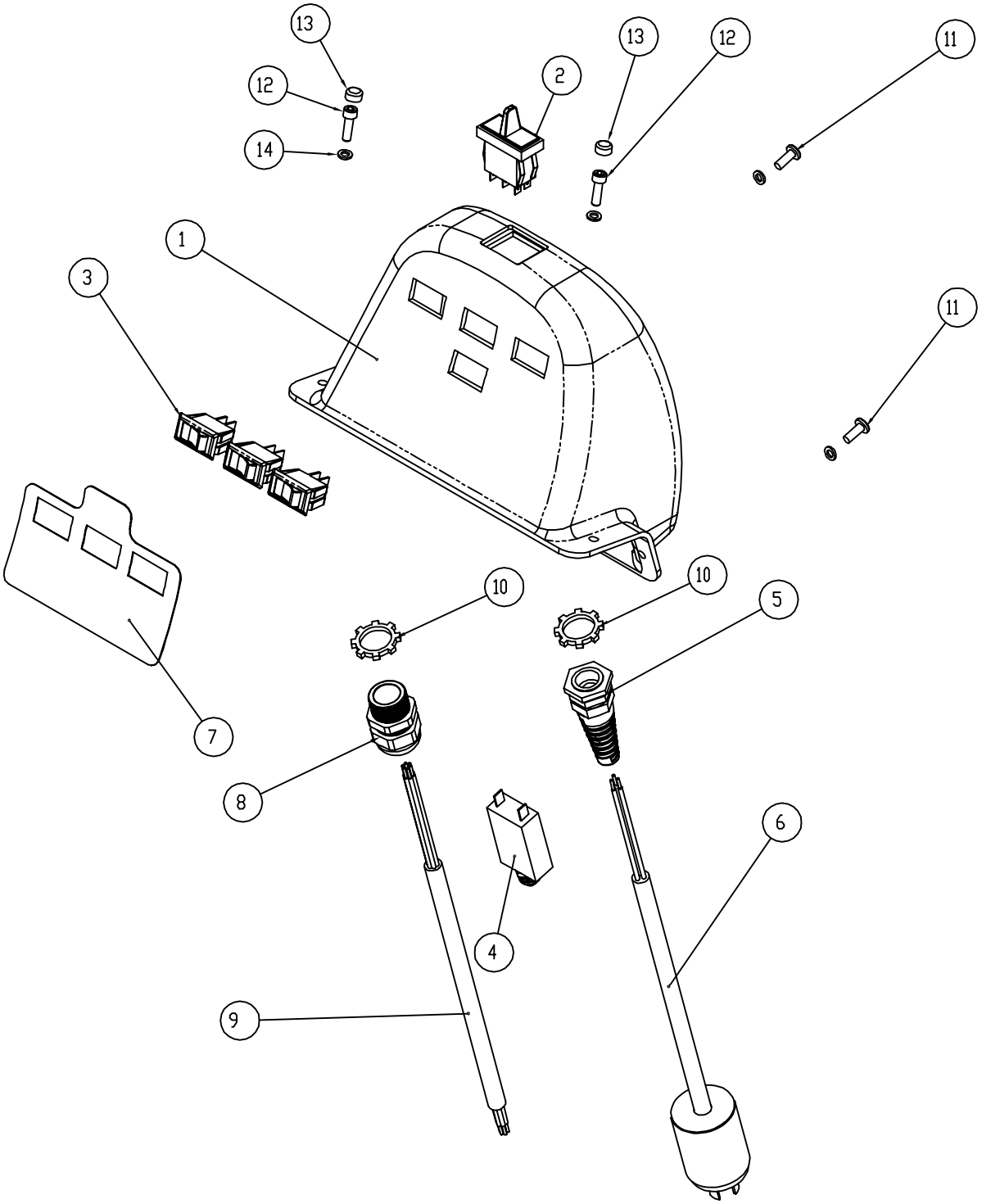

						SCALE NTS	TITLE HM35 GENERIC SERVICE DRAWINGS		
						CHECKED M.D.C.	PRODUCT HM35	DRAWING/PART No 09-1108-0000	A4	SHEET 6 OF 6 SHEETS
22.10.08		A	NEW DRAWING	MC	MC	DRN M.D.C.			
DATE	CRO No	ISS	REVISION RECORD	DR	CHK				